## Beams 1-4

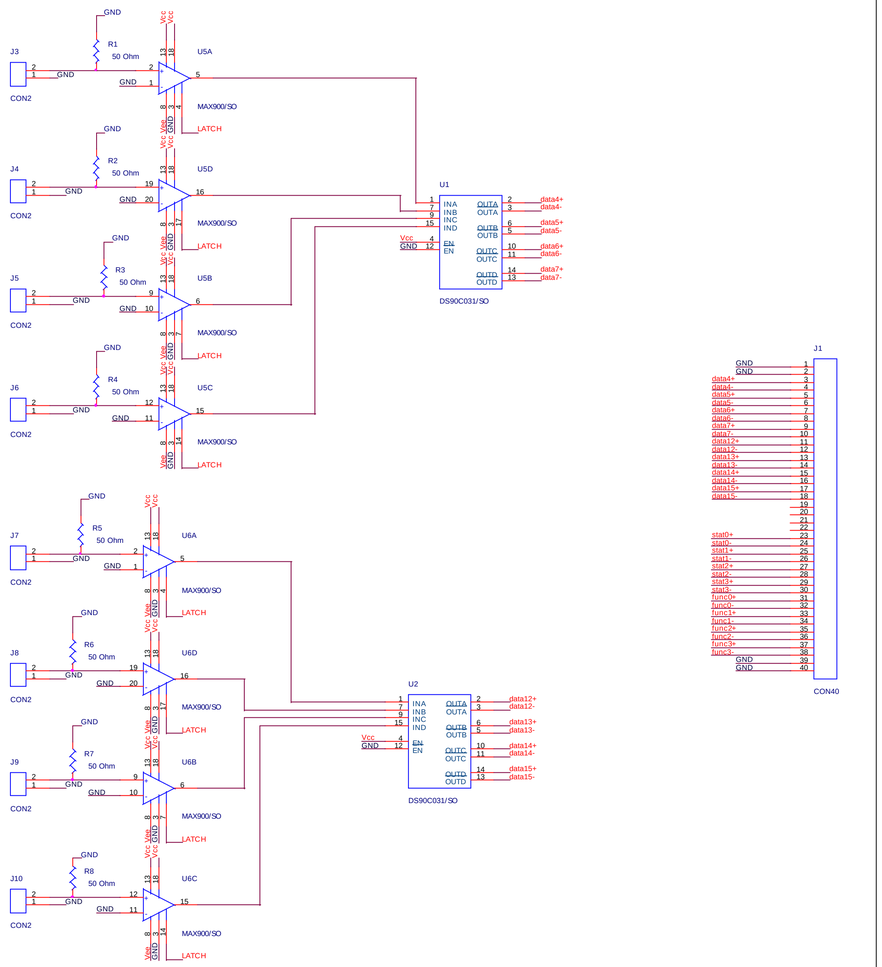


## Beams 5-8

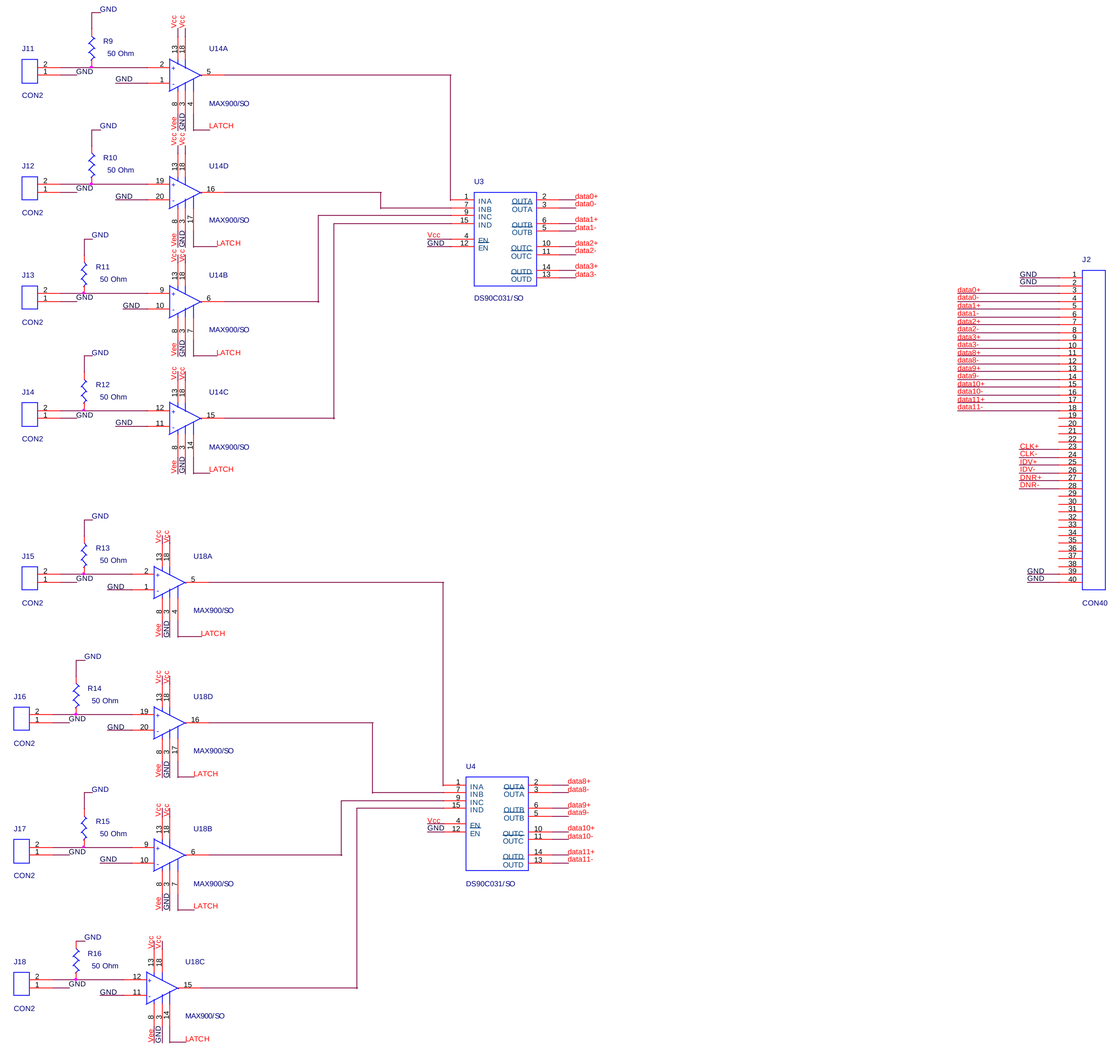


## A to D

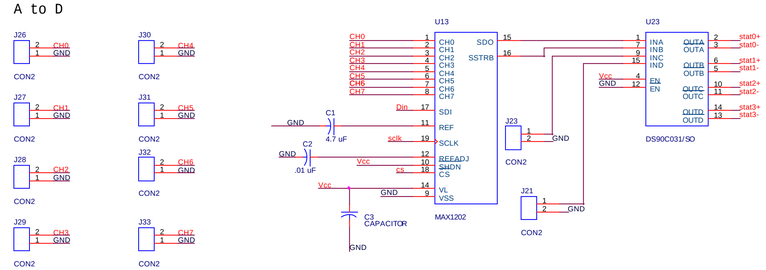


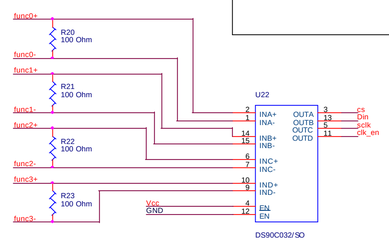


## Clock

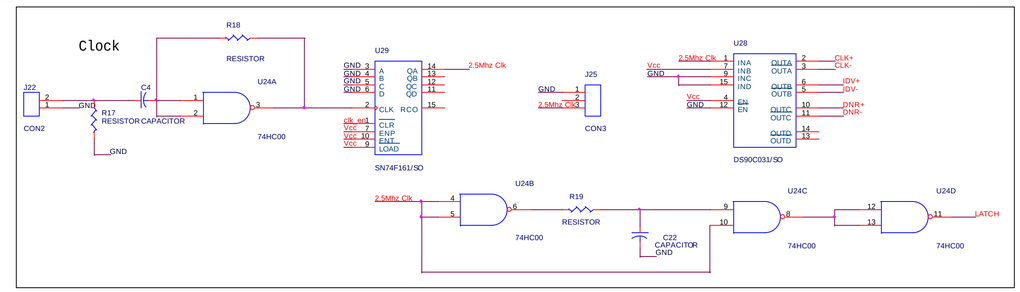


## Ground and VCC

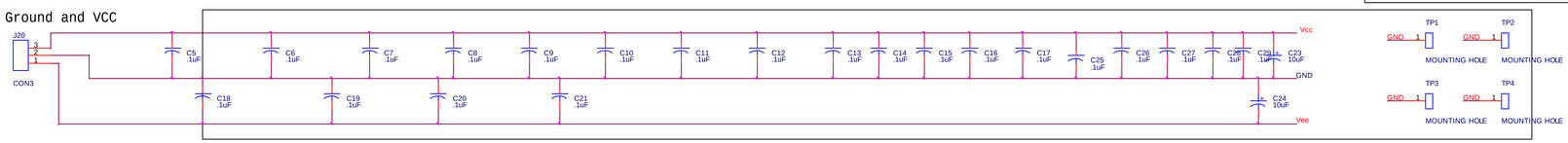





| | | | |
|---|---|---|---|
| Title | <Title> | | |
| Size D | Document Number <Doc> | | Rev <RevCode> |
| Date: Wednesday, October 30, 2002 | | Sheet 1 of 1 | |